128, av. du Maréchal-de-Lattre-de-Tassigny - 87045 LIMOGES Cedex
Tel: +33(0)5 55 06 87 87 Fax: +33(0)5 55 06 88 88
www.legrand.com

# 19" modular fibre optic drawers

**Cat.No(s) : 0 321 00/01/02/04/06 - 0321 10/11/12/13/14/15/16/17/18/19 0 321 20/21/23/24/25/27 - 0 321 33/34/36/37 - On demand**

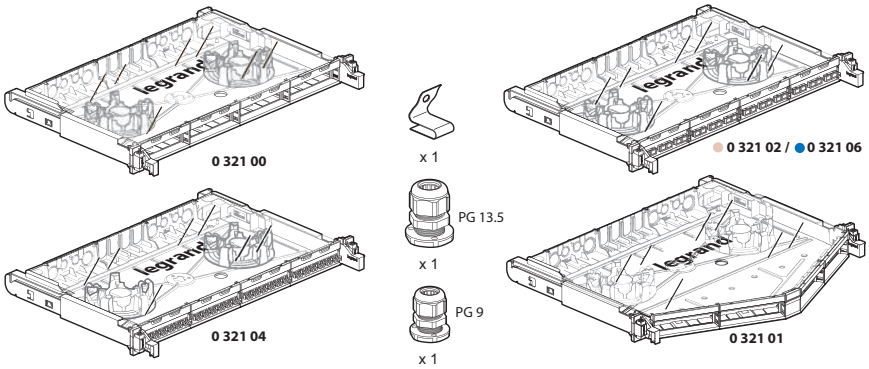


## 1. APPLICATION

Metal 19" modular fibre optic drawers, 8 cable entries, supplied with screw fixing kit, 2 cable glands (PG 9 and PG 13.5), 2 coiling kits.
Equipped with the new-generation Soluclip system for automatic (screwless) fixing on rack or cabinet uprights.
Supplied with identification labels.
Sliding: end stop at a 20° angle for easier wiring.
Universal mounting on all racks or cabinets with automatic earthing on unpainted uprights. Painted panels can be connected to earth with a cord and a claw connection.

## 2. RANGE

| | |
|---|---|
| 0 321 00 | Empty drawer - Takes any modular fibre optic unit, up to four units maximum |
| 0 321 01 | Empty drawer - Takes any modular fibre optic unit, up to four units maximum |
| 0 321 02 | Equipped with SC units for 24 multimode optical fibres |
| 0 321 04 | Equipped with LC units for 48 multimode optical fibres |
| 0 321 06 | Equipped with SC units for 24 singlemode optical fibres |

## 3. DRAWER DIMENSIONS (mm)

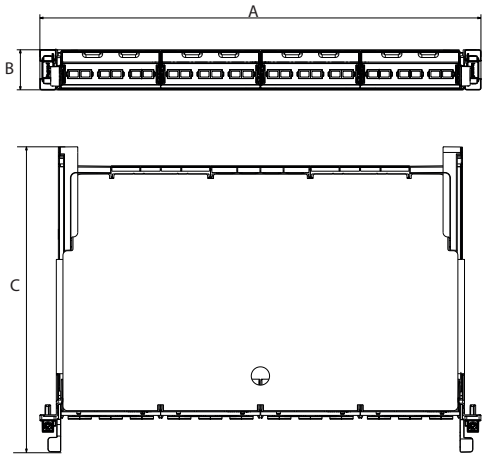


| Cat. Nos. | A | B | C |
|---|---|---|---|
| 0 321 00/02/04/06 | 482.5 | 43.8 | 334 |
| 0 321 01 | | | 408.6 |

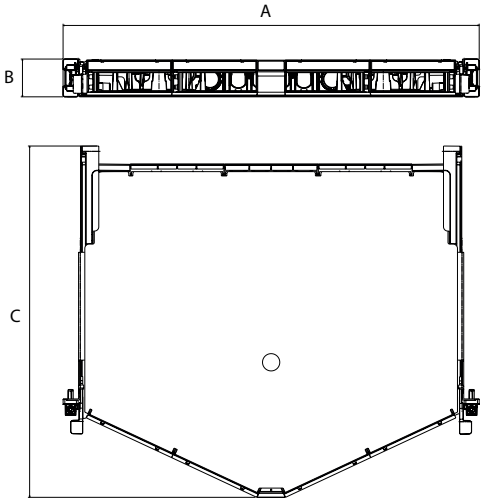


## 4. CONNECTION

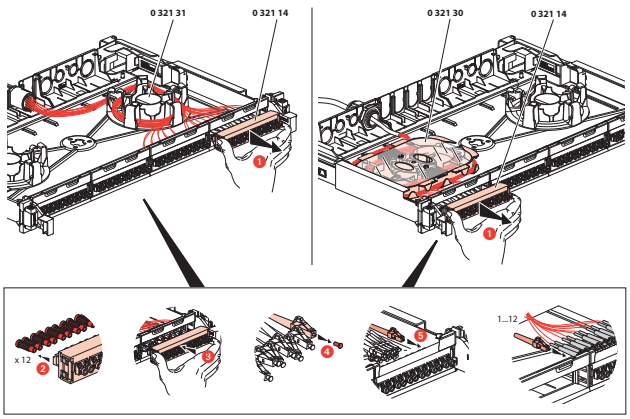

## 5. FIBRE OPTIC UNITS

Fibre optic units are clipped directly on modular fibre optic drawer Cat. No. 0 321 00, on modular corner fibre optic drawer Cat. No. 0 321 01, and also on spliceable cassette Cat. No. 0 321 41.

| | | |
|---|---|---|
| 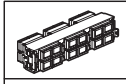 | 0 321 11 | SC duplex HD - 12 singlemode fibres |
| | 0 321 21 | SC duplex HD - 12 multimode fibres |
| 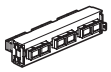 | 0 321 10 | SC duplex - 6 singlemode fibres |
| | 0 321 12 | SC/APC duplex - 6 singlemode fibres |
| | 0 321 20 | SC duplex - 6 multimode fibres |
| 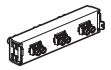 | 0 321 13 | LC duplex - 6 singlemode fibres |
| | 0 321 23 | LC duplex - 6 multimode fibres |
| | 0 321 36 | LC duplex - 6 multimode fibres (aqua) |
| 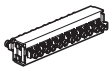 | 0 321 14 | LC duplex - 12 singlemode fibres |
| | 0 321 16 | LC/APC duplex - 12 singlemode fibres |
| | 0 321 24 | LC duplex - 12 multimode fibres |
| | 0 321 37 | LC duplex - 12 multimode fibres (aqua) |
| | 0 321 15 | LC duplex HD - 24 singlemode fibres |
| | 0 321 25 | LC duplex HD - 24 multimode fibres |
| 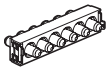 | 0 321 17 | ST for 6 singlemode fibres |
| | 0 321 27 | ST for 6 multimode fibres |
| 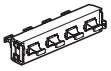 | 0 321 33 | 4 adaptor, feedthrough, singlemode MTPs |
| | 0 321 34 | 4 adaptor, feedthrough, multimode MTPs |
| On demand | | - 4 or 8 MTP adaptors multimode or singlemode key UP/key UP<br>- 4 or 8 MTP adaptors OM5 key UP/key down<br>- LC duplex for 6/12 or 24 fibres OM5<br>- SC duplex 6 or 12 fibres OM5 |

## 6. UNIT DIMENSIONS (mm)

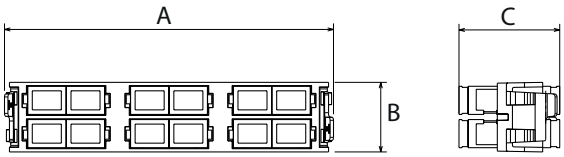


| Cat. Nos. | A | B | C |
|---|---|---|---|
| 0 321 10/11/12/20/21 | 108.8 | 23 | 33.3 |

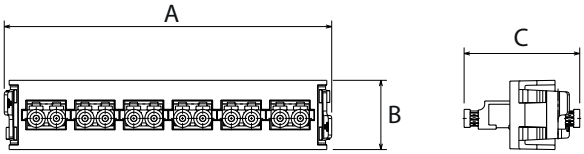


| Cat. Nos. | A | B | C |
|---|---|---|---|
| 0 321 13/14/15/16/23/24/25/36/37 | 108.8 | 23 | 38.4 |

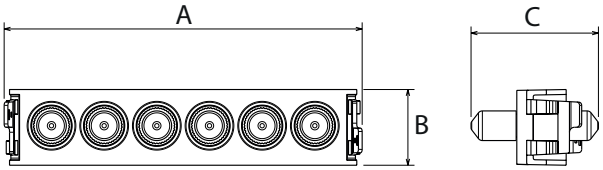


| Cat. Nos. | A | B | C |
|---|---|---|---|
| 0 321 17/27 | 108.8 | 23 | 38.7 |

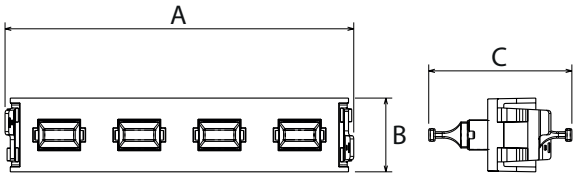


| Cat. Nos. | A | B | C |
|---|---|---|---|
| 0 321 18/19 - 0 321 33/34 | 108.8 | 23 | 44.7 |

## 7. TECHNICAL CHARACTERISTICS

### 7.1 Drawer characteristics

Depth: 285 mm, height 1 U
Maximum capacity:
96 LC connectors
48 SC connectors
24 ST connectors
32 MTP connectors

Supplied with screws and wiring accessories:
2 cable glands (1 x PG9/1 x PG13.5)
1 claw for earthing

In accordance with IEC 60297-3-100

### 7.2 Connector characteristics

SC Duplex adaptors :
- Singlemode (UPC : blue, APC : green) or multimode (aqua)
- "Push-pull" latch type locking
- Unibody plastic part
- Ceramic sleeve
- Metallic clamping clips
- Durability : 500 insertions
- Maximum insertion loss increase: 0.2dB
- In accordance with IEC 61754-4, IEC 60784-14, TIA-604-3

LC Duplex adaptors:
- Singlemode (UPC : blue, APC : green) or multimode (aqua)
- High density
- Tab locking
- Unibody plastic part
- Ceramic sleeve
- Metallic clamping clips
- Durability : 500 insertions
- Maximum insertion loss increase: 0.2dB
- In accordance with IEC 61754-20, TIA-604-10

ST Simplex adaptors:
- Singlemode (red cap) or multimode (black cap)
- Locked by "push and turn" bayonet type connector
- Metallic part
- Ceramic sleeve
- Tightening screw clamping
- Durability : 500 insertions
- Maximum insertion loss increase: 0.2dB
- In accordance with IEC 61754-2, TIA-604-2

MTP/MPO adapters:
- Singlemode (green) or multimode (beige)
- "Push-pull" latch type locking
- Unibody plastic part
- Metallic clamping clips
- Opposite key (Key up/Key down) or aligned (Key up/Key up)
- Adapted to Datacenters' high density
- In accordance with IEC 61754-7, TIA-604-5, TIA-604-18

Protection class: IP 20
Impact strength: IK 04

### 7.3 Climate characteristics

Storage and usage temperature: - 10°C to + 60°C

### 7.4 Standards Conformance

All parts ensure conformity to the following standards:
ISO/IEC 11801, EN 50173, ANSI/TIA 568

## 8. ACCESSORIES FOR FIBRE OPTIC DRAWER

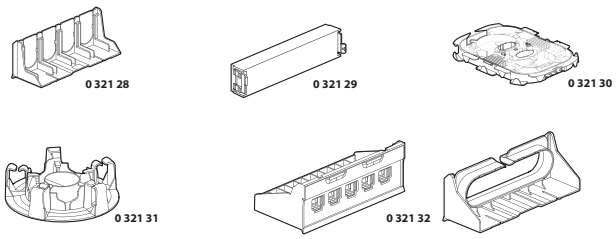


### 8.1 Fanout accessory for pretermination Cat. No. 0 321 28

This clips onto the back of the drawer and allows entry of the preterminations by fixing fanouts to the 4 knockout cable entries.

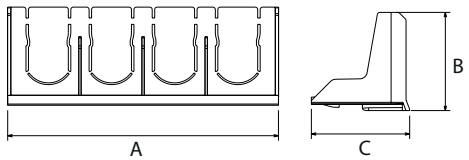


### 8.2 Blanking plate

**Cat. No. 0 321 29**

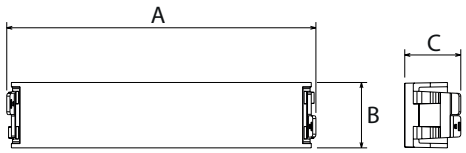


### 8.3 Cassette for pigtails

**Cat. No. 0 321 30**
Capacity: 24 fibres
In the drawer : Up to 2 cassettes, one on top of the other (fixing clip)
- Splice holder function
- Coiling fibres internally, and the cables on the surroundings
- Double-sided adhesives for clamping instead of coiling kits if needed
ABS plastic
Weight: 81 g
Operating temperature: -40°C to +50°C
Standard: ANSI/TIA 568.C
ISO/IEC 11801, EN 50173

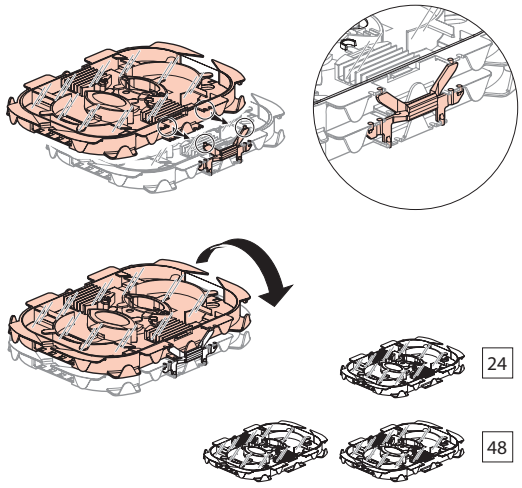

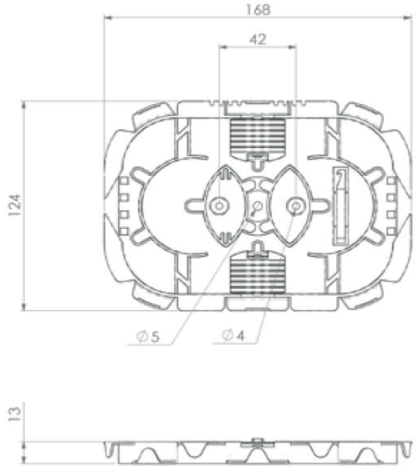


**8.4 Coiling kit**

**Cat. No. 0 321 31**
The 2 coiling kits clip directly onto modular fibre optic drawer Cat. No. 0 321 00.

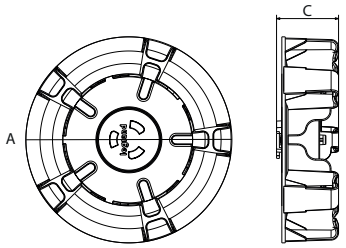


**8.5 Copper unit**

**Cat. No. 0 321 32**
This clips directly onto modular fibre optic drawers:
Cat. Nos. 0321 00/01/02/04/06; it can be used to mix optical fibre and copper and up to 5 Cat 5e, Cat 6, Cat 6A and Cat 8 LCS3 RJ45 connectors per unit. Supplied with coloured labels.

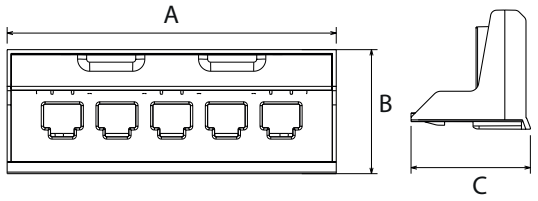


| Cat. Nos. | A | B | C |
|---|---|---|---|
| 0 32128 | 108.7 | 39.4 | 39.5 |
| 0 321 29 | 108.8 | 23 | 19.7 |
| 0 321 30 | 168 | 13 | 124 |
| 0 321 31 | Ø 109 | | 32.8 |
| 0 321 32 | 108.8 | 41 | 39.5 |

## 10. MADE-TO-ORDER PRODUCTS

Legrand's special service offers made-to-order products:

- LC duplex block for 6/12 or 24 OM5 fibres : Lime colour block, Beige LC feedthrough
- SC duplex block for 6 or 12 OM5 fibres : Lime colour block, Beige SC feedthrough
- Block 4 or 8 MTP adaptor OM5 key UP/key down: black block, Lime MTP feedthrough
- Block 4 or 8 MTP multimode or singlemode adaptor key UP/key UP : black block, grey MTP feedthrough

See the different options in the above tables

Please consult your distributor or your local sales office.